PARTS LIST			
ITEM	QTY	PART NUMBER	DESCRIPTION
1	1	7100-8160	Rotation Bushing Plate
2	1	7100-8030	Cyclic Roll Bushing
3	1	7100-8180	Cyclic Roll Bushing Cover
4	4	AN3-7A	10-32 x 7/8"
5	8	AN960-10	#10 Flat Washer x .062"
6	4	MS21042-3	10-32 Stop Nut
7	4	AN4-5A	1/4"-28 x 5/8"
8	8	AN960-416	1/4" Flat Washer x .062"
9	4	MS21042-4	1/4"-28 Stop Nut

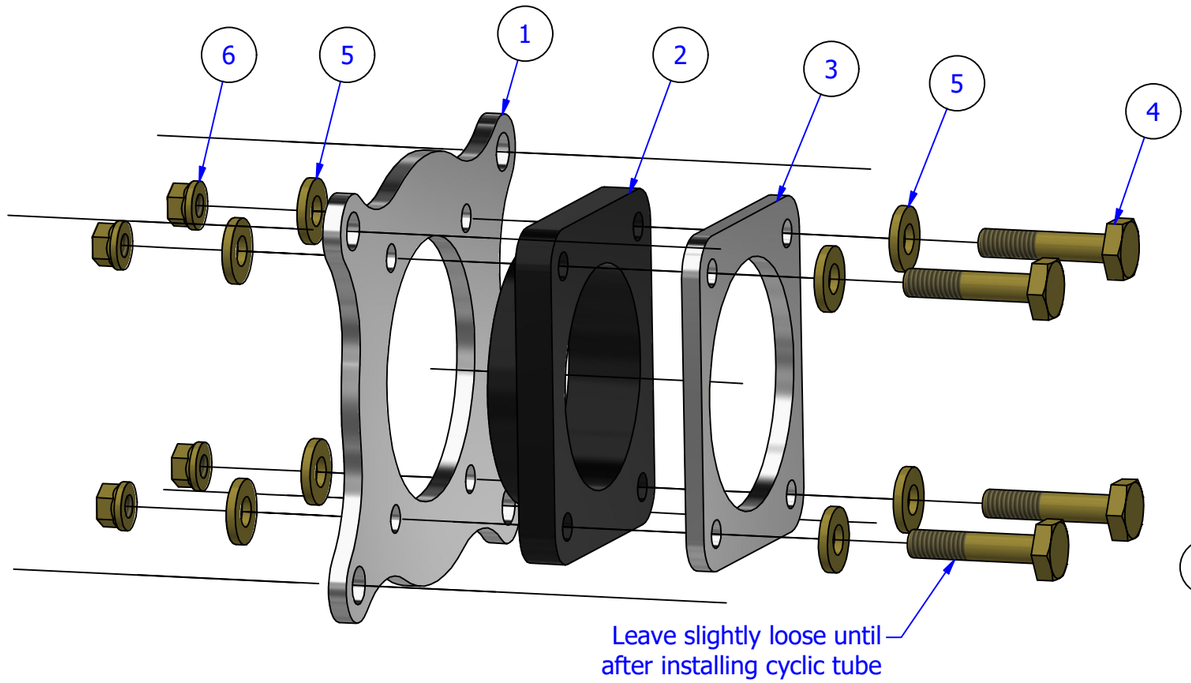

Bushing Install

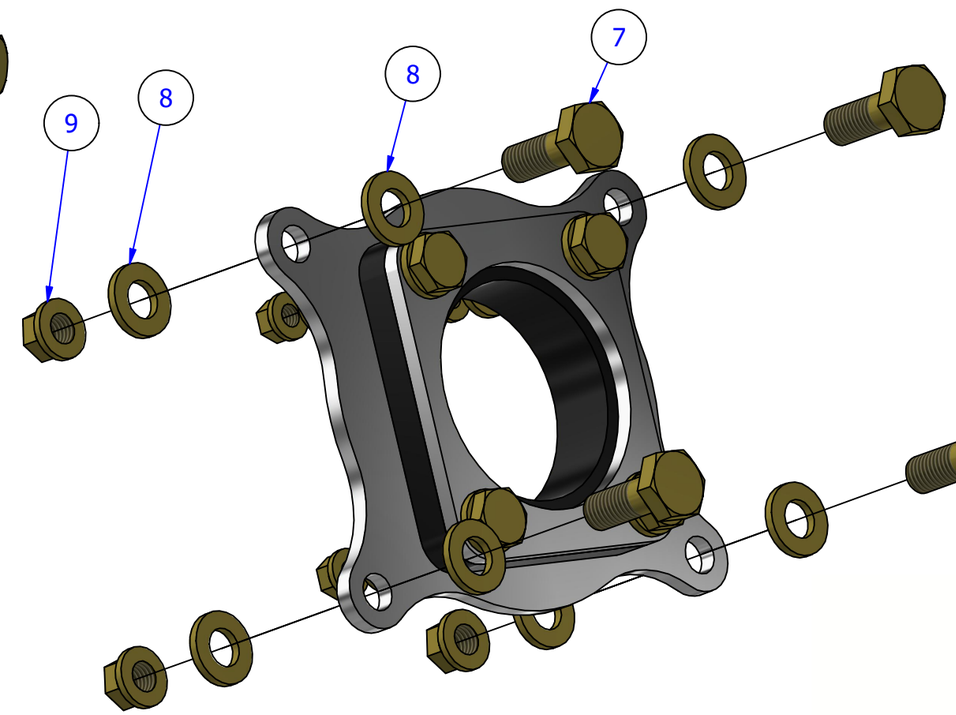

Mount To Frame

GYRO TECHNIC
engineering the power of flight

31196 490th Street, Kasota, MN 56050
507-933-9033
sales@gyrotechnic.com www.gyrotechnic.com

THIS DRAWING AND THE INFORMATION HEREIN IS THE EXCLUSIVE PROPERTY OF GYRO TECHNIC INC AND IS NOT TO BE REPRODUCED OR USED TO MANUFACTURE ITEMS FOR USE OR SALE BY ANY OTHER PERSON OR CONCERN WITHOUT THE WRITTEN PERMISSION OF GYRO TECHNIC INC.

PART NAME:

PART NUMBER:
Cyclic_Bushing Assy